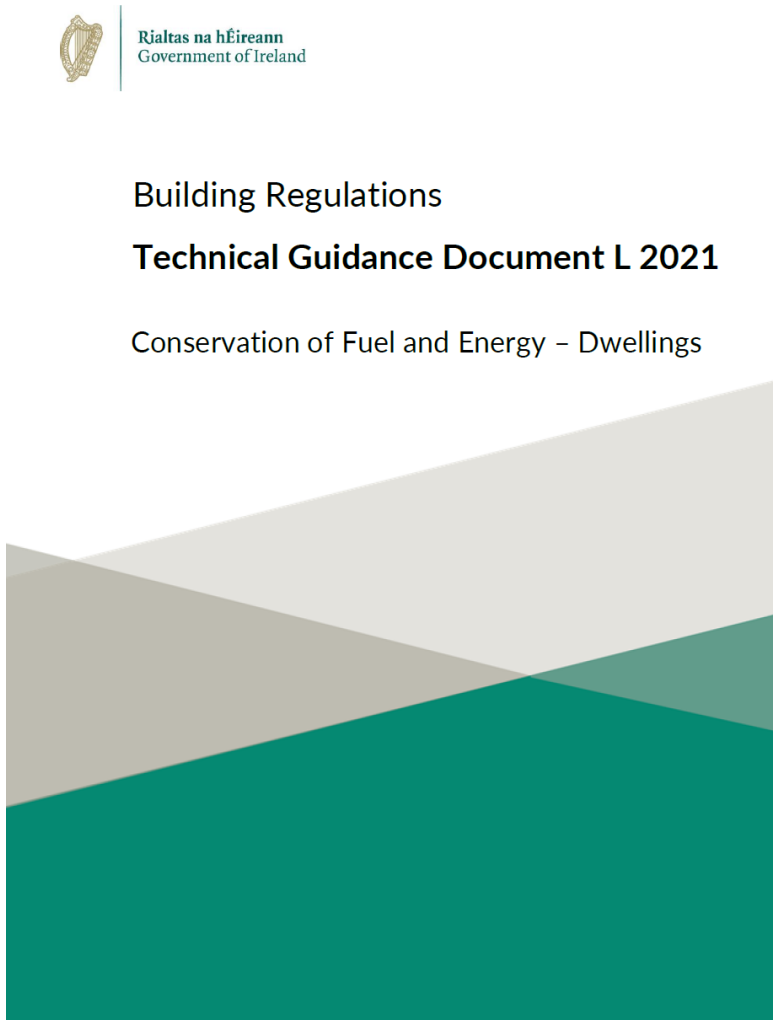

PASSIVATE.
BUILDING ENERGY CONSULTING

Approach to thermal bridging for Part L requirements

Andrew Lundberg

andrew@passivate.ie

15th September 2022

Thermal bridging – what is it, where does it occur, and how do we measure it?

Thermal Bridges defined

A thermal bridge occurs anywhere in the building envelope where the otherwise uniform flow of heat is altered or disturbed due to a change in the building fabric, or due to an increase in internal or external areas due to the building form.

Avoiding thermal bridging issues

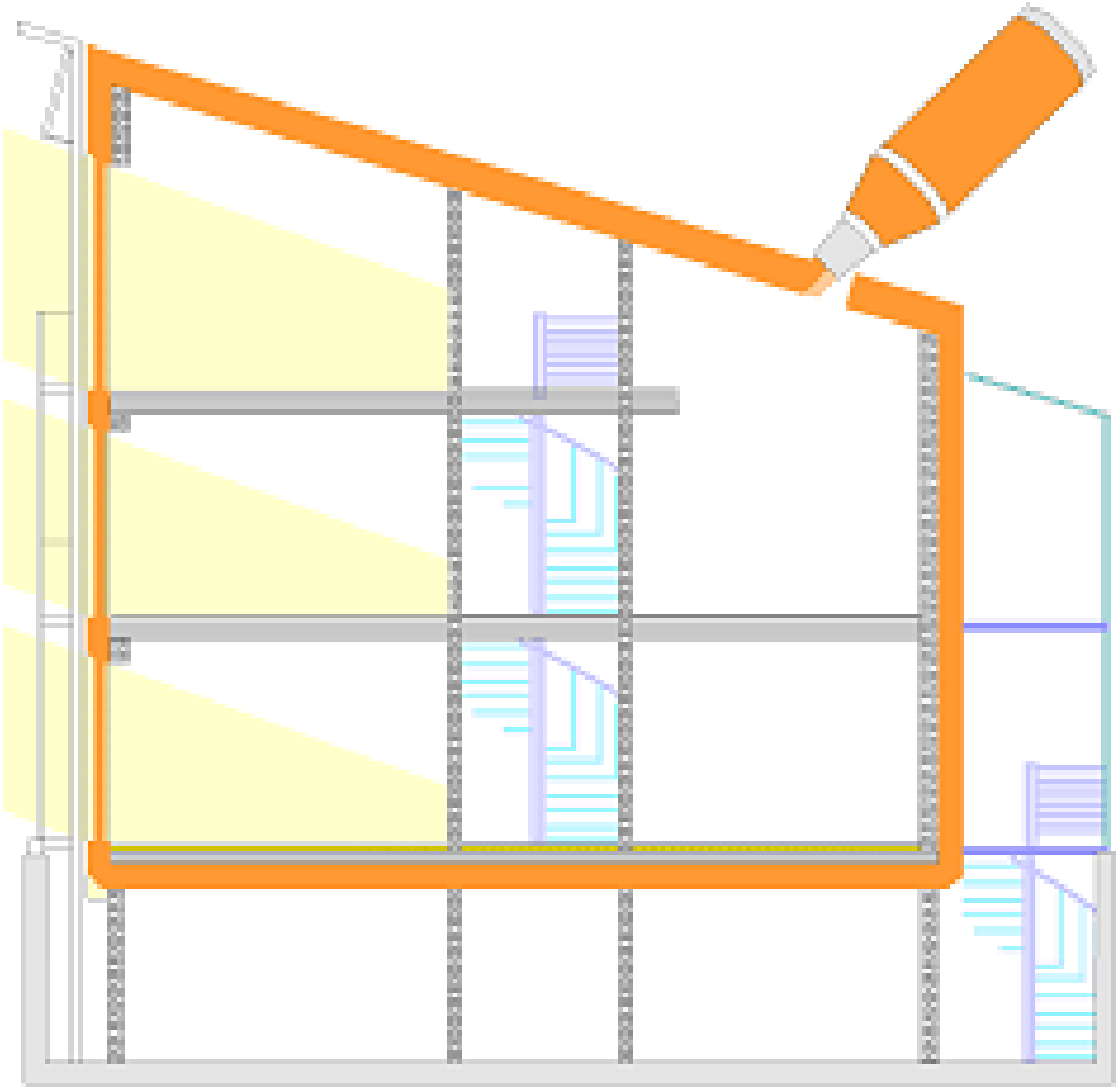

3 different types of thermal bridge:

- Constructional, e.g. RSJ penetrating insulation, steel column thru floor slab, brackets for cladding/balconies etc.) – ***Chi values***

- Repeating thermal bridges (e.g. wall studs, joists, rafters) – included in the U-value of planar elements

- Geometric thermal bridges (due to the shape of the building) – all typical junctions – ***psi values***

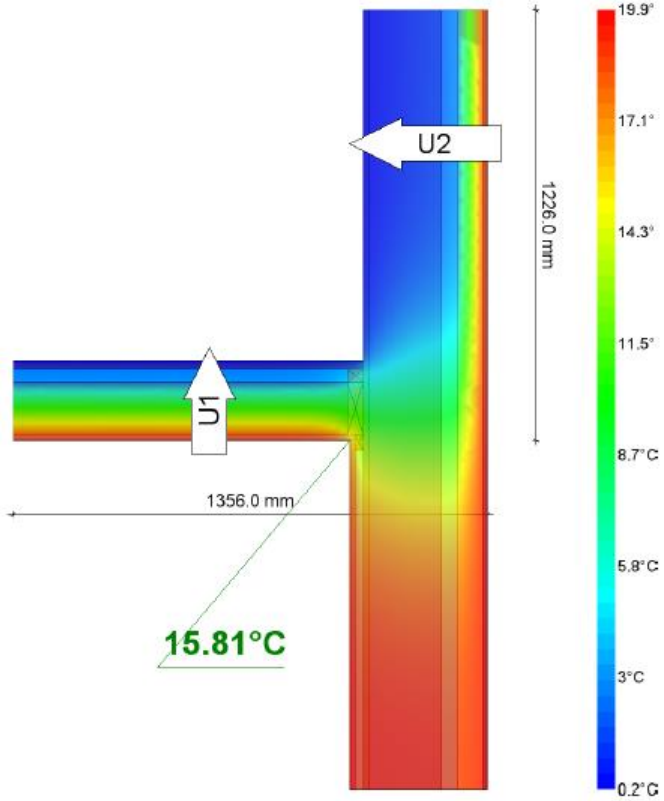

KEY POINT:

- **U-values can only measure heat flow in 1-dimension**, that is they only estimate heat loss which travels through the building envelope perpendicular to the internal surfaces! (Repeating thermal bridges can commonly be included in U-value calculations without the need for thermal modelling)
- As we rely on U-values to estimate building fabric heat loss, **we are missing heat loss in the 2nd and 3rd dimension** (reality!).

Repeating vs. linear thermal bridges

Ceiling joists in cold pitched roofs that are insulated at ceiling level.

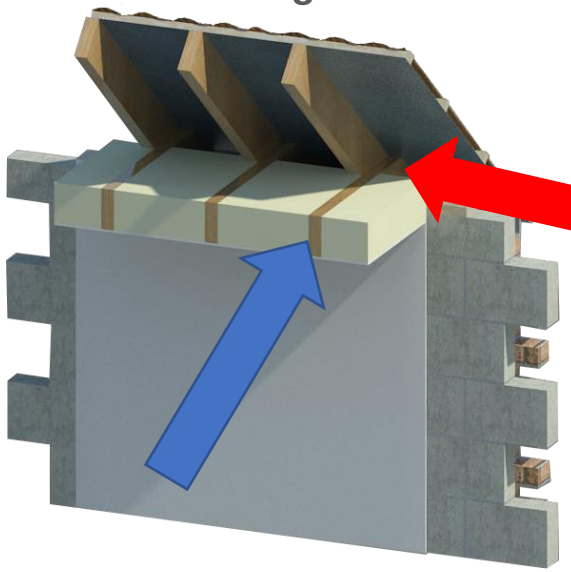

INCLUDED IN THE U-VALUE!

INCLUDED IN THE PSI-VALUE!

Ground floor joists in an insulated suspended timber ground floor.

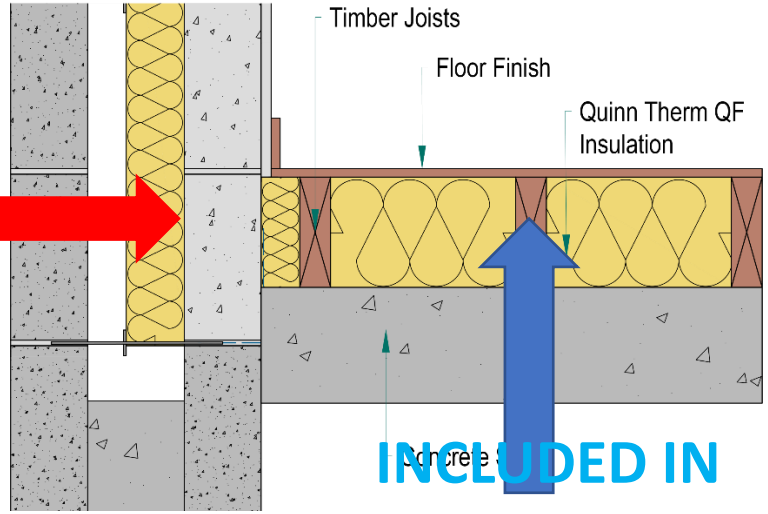

INCLUDED IN THE U-VALUE!

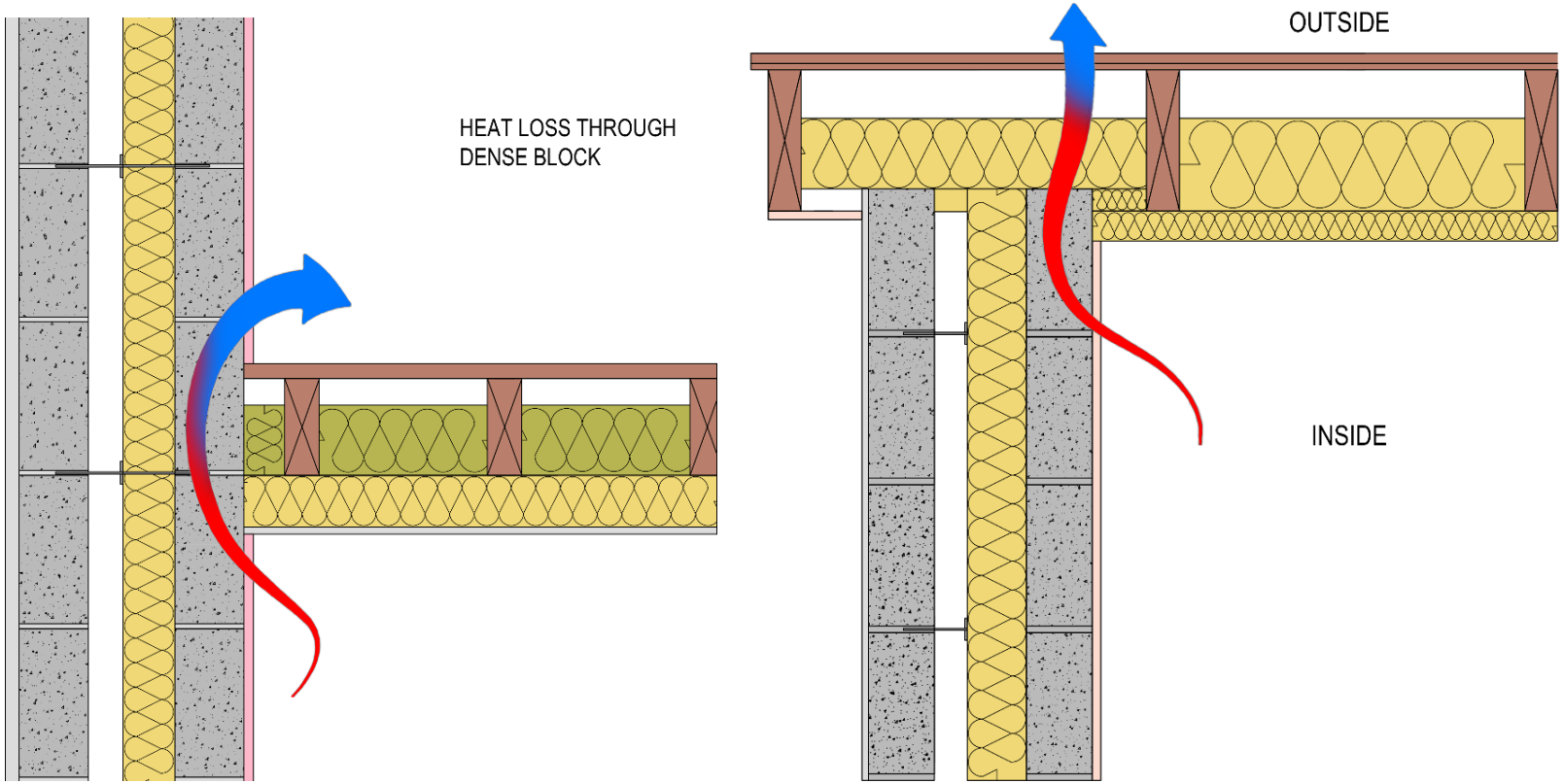
HEAT LOSS THROUGH
DENSE BLOCK
OUTSIDE
INSIDE

Thermal bridging

Thermal bridges are generally measured in accordance with EN **ISO 10211 (2017).**

This document is generic, and can be used in any region, where national/institutional convention specifies boundary conditions to be used!

It allows for external or internal measurement conventions, as long as the same system is used throughout a project.

Convention

- Thermal bridges (psi-values) are influenced mainly by two things:
  - The junction design
  - The measurement convention
- TGD Part L Appendix D requires thermal bridges to be calculated in accordance with BRE paper BR497: Calculation of linear thermal transmittances & temperature factors (2016)

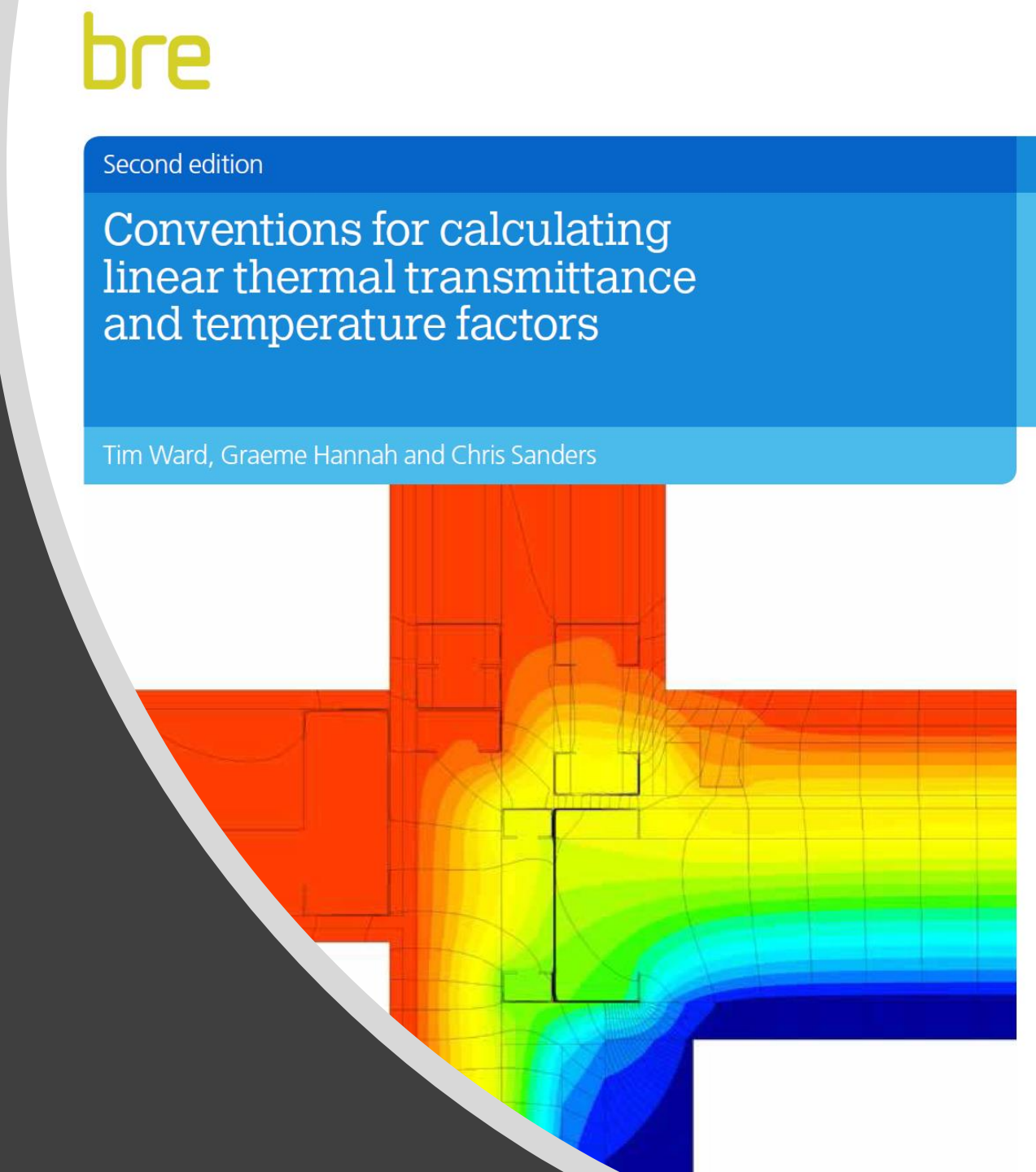

Measurement convention – ISO 13789

- ***Key point: the DEAP convention of measurement uses internal finished faces to measure the extent of the thermal envelope. Thermal bridges must be measured to the exact same points on the building, otherwise the psi-values don't relate accurately to the specific project!***

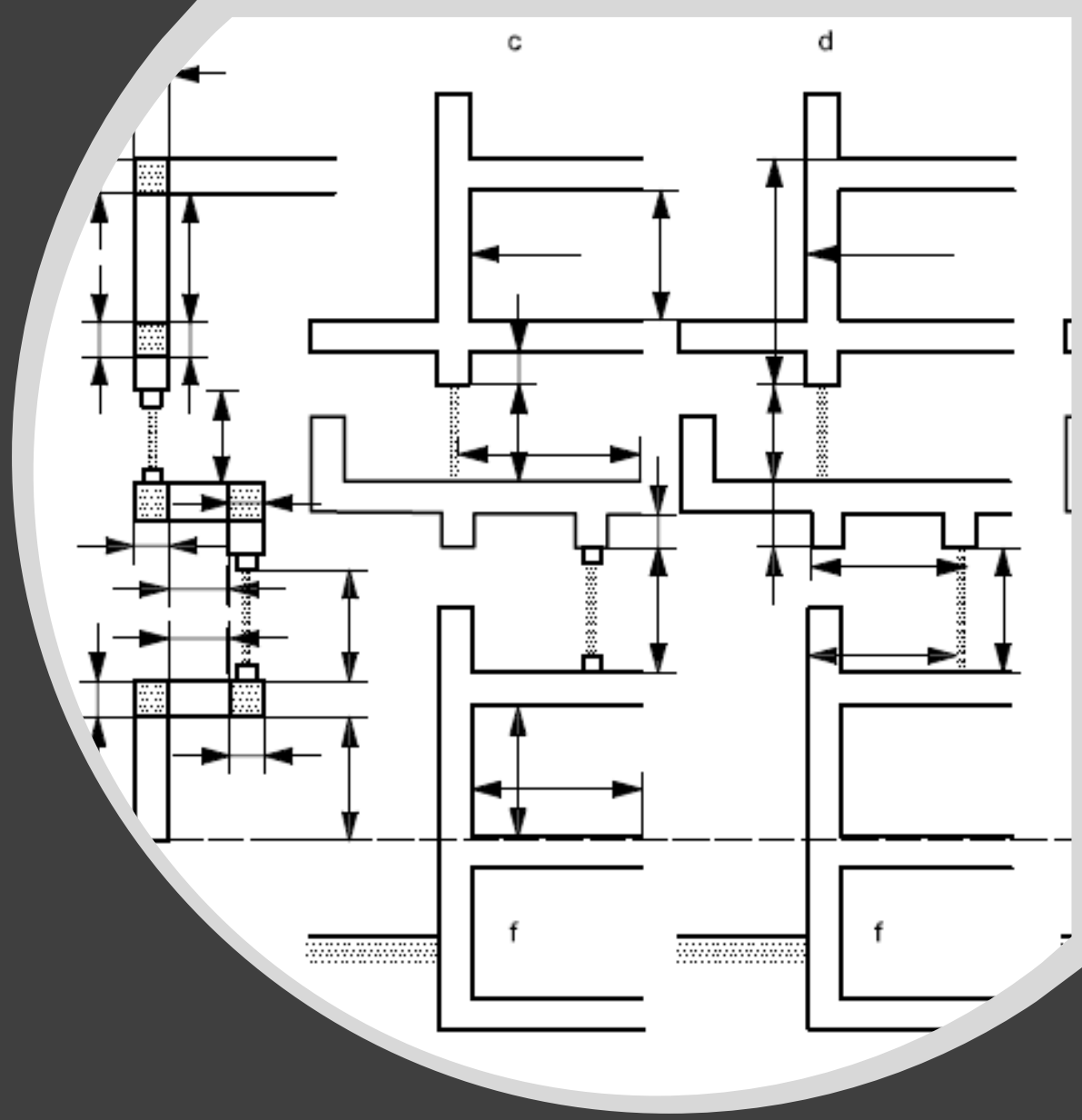

What’s the difference?

- When measuring the heat flow through two elements flanking a junction using **internal dimensions**, overall heat loss is underestimated.
- Psi-values are normally positive to account for this!
- When measuring the heat flow using **external dimensions**, heat loss is generally over-estimated.
- Psi-values are normally then negative to account for this!

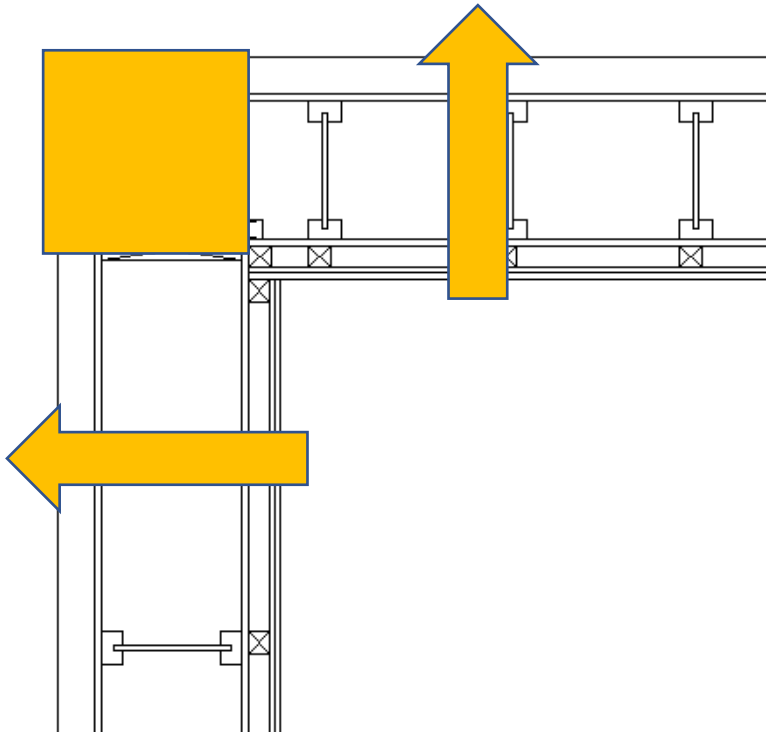

Why is it important?

- Heat loss – to account for additional heat losses not accounted for by U-values

- Surface mould growth risk – to determine the minimum surface temperature factor, fRsi, and check compliance for the building type and requirement.

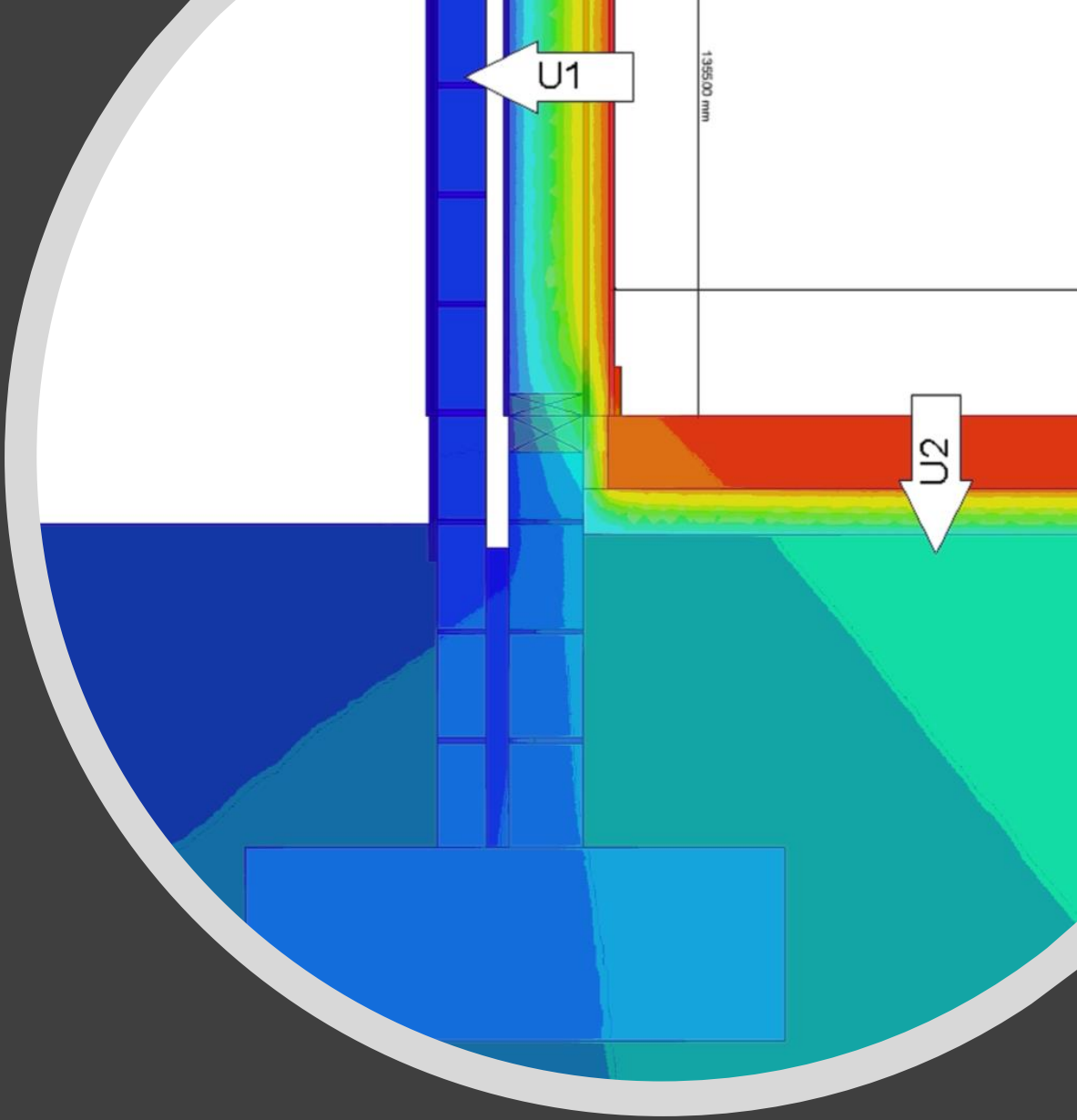

How thermal bridges are measured

1. Drawing is provided by client
2. Drawings are re-drawn or simplified to suit requirements of thermal modelling
3. The thermal model is constructed & material properties are assigned.
4. Boundary conditions are assigned in accordance with BR497.
5. The calculation is ran and heat flow for the entire model is determined.
6. Known heat flow, taken from U-values, is subtracted from the total, and the remaining energy is attributed to the junction (psi-value).
7. Surface temperatures are assessed to determine compliance with fRsi (mould growth risk) requirements of TGD Part L (2017)

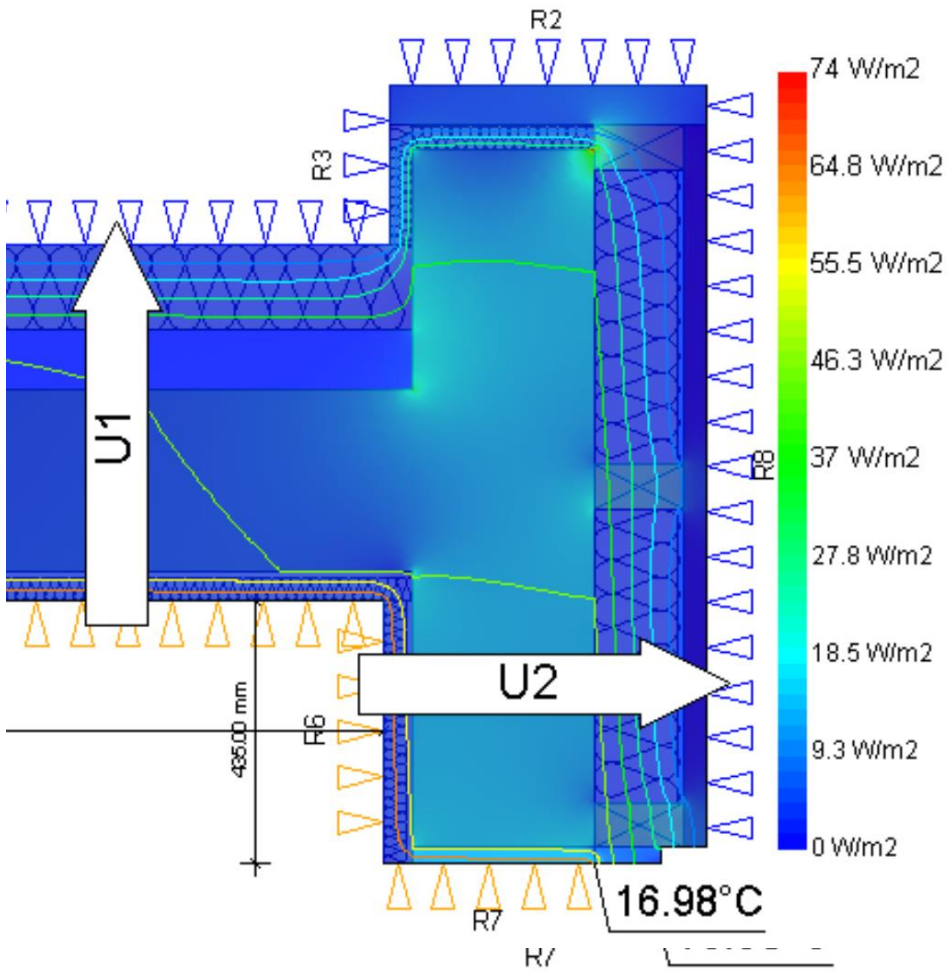

3D applications

- Determination of surface temperature issues due to point penetrations

- Accounting for additional heat losses at point penetrations such as wall ties, helping-hand brackets in rainscreen cladding systems, structural non-thermally broken penetrations, e.g. RSJ through floor slab or wall etc.

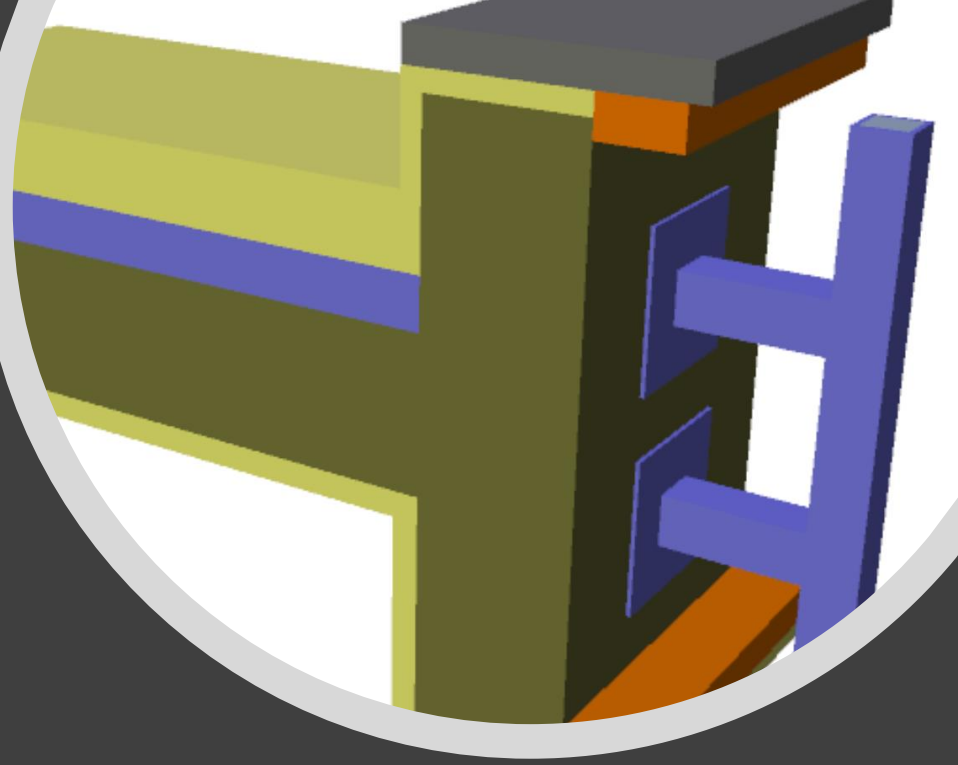

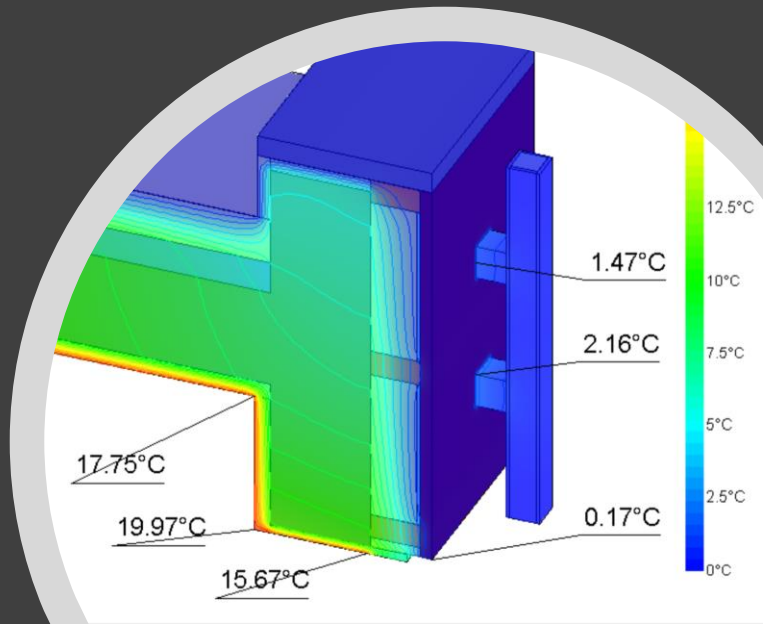

3D applications – brackets & U-values

- Rainscreen cladding systems are becoming more commonly used in dwelling designs.
- These systems normally use aluminium helping-hand brackets.
- Default/standard/quoted chi-values for these systems are often grossly underestimated!
- The effects are commonly not known until it’s almost too late…

U-value 3D example – brackets & U-values

Undisturbed U-value = 0.118W/m²K

U-value including effects of bracket & rail = 0.408W/m²K

U-value including use of 10mm thermal break plate = 0.209W/m²K

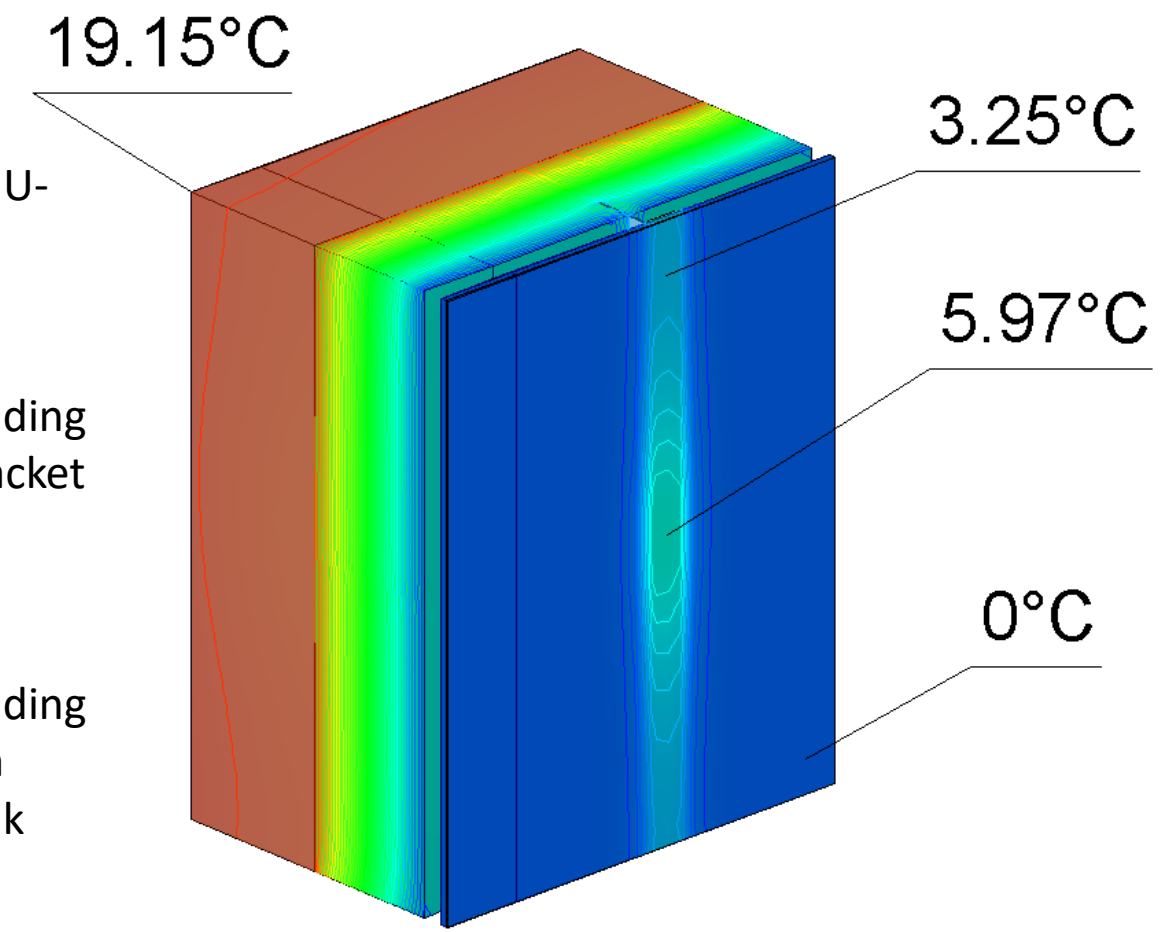

Example – metal support bracket at intermediate floor

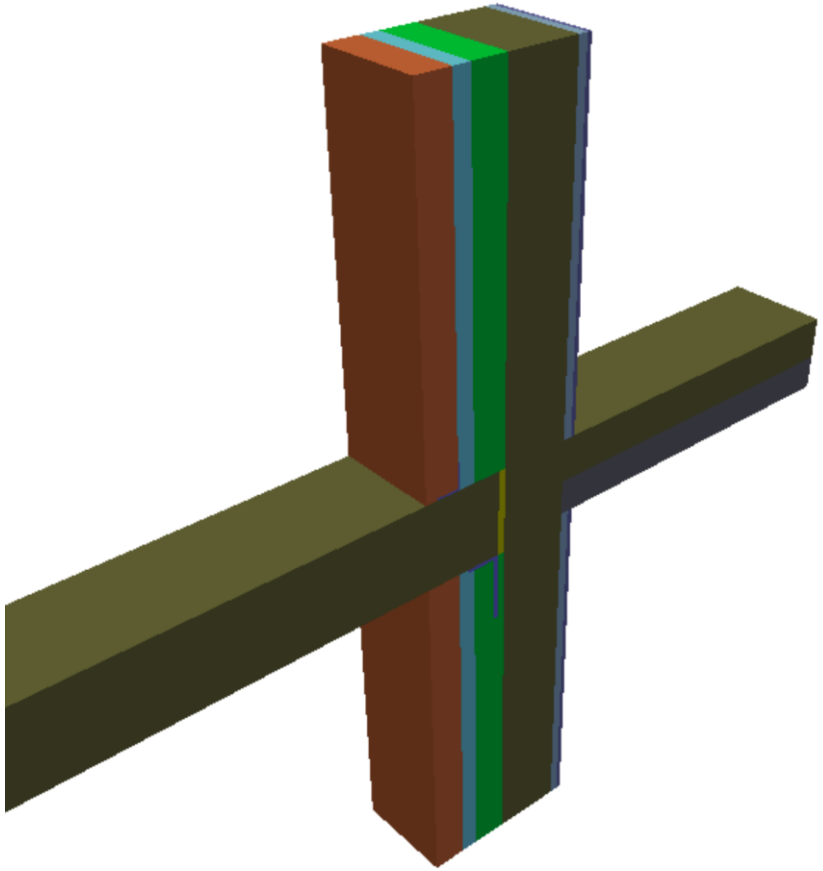

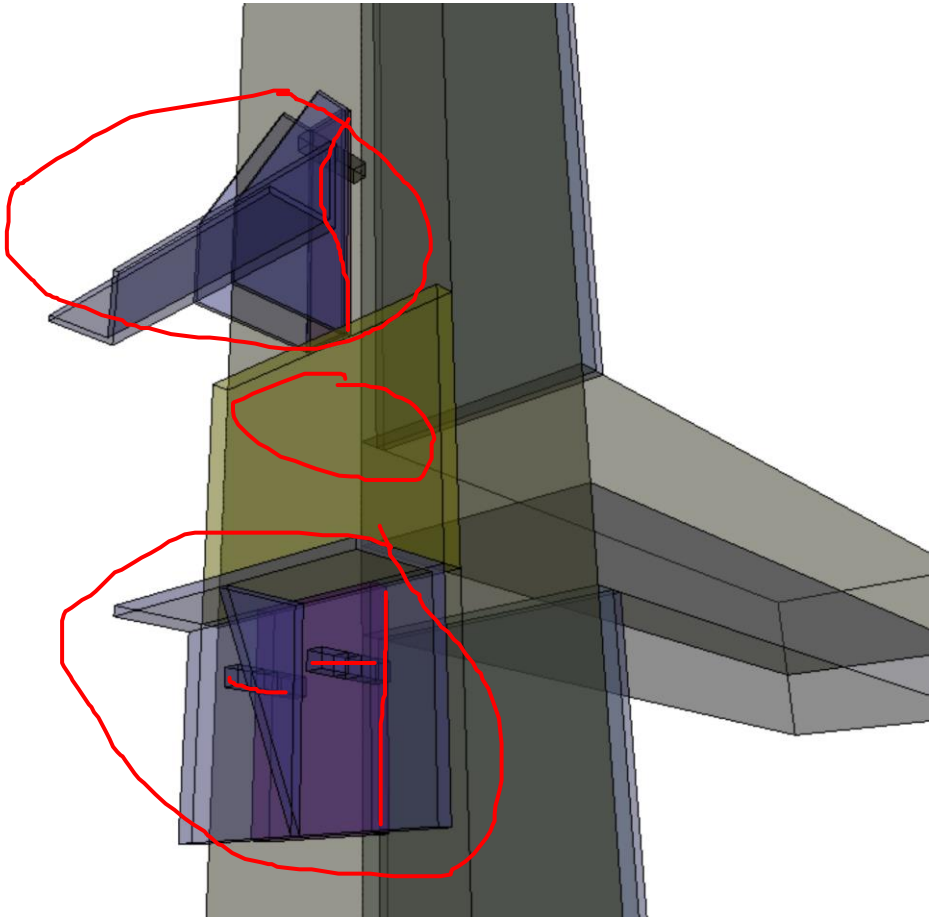

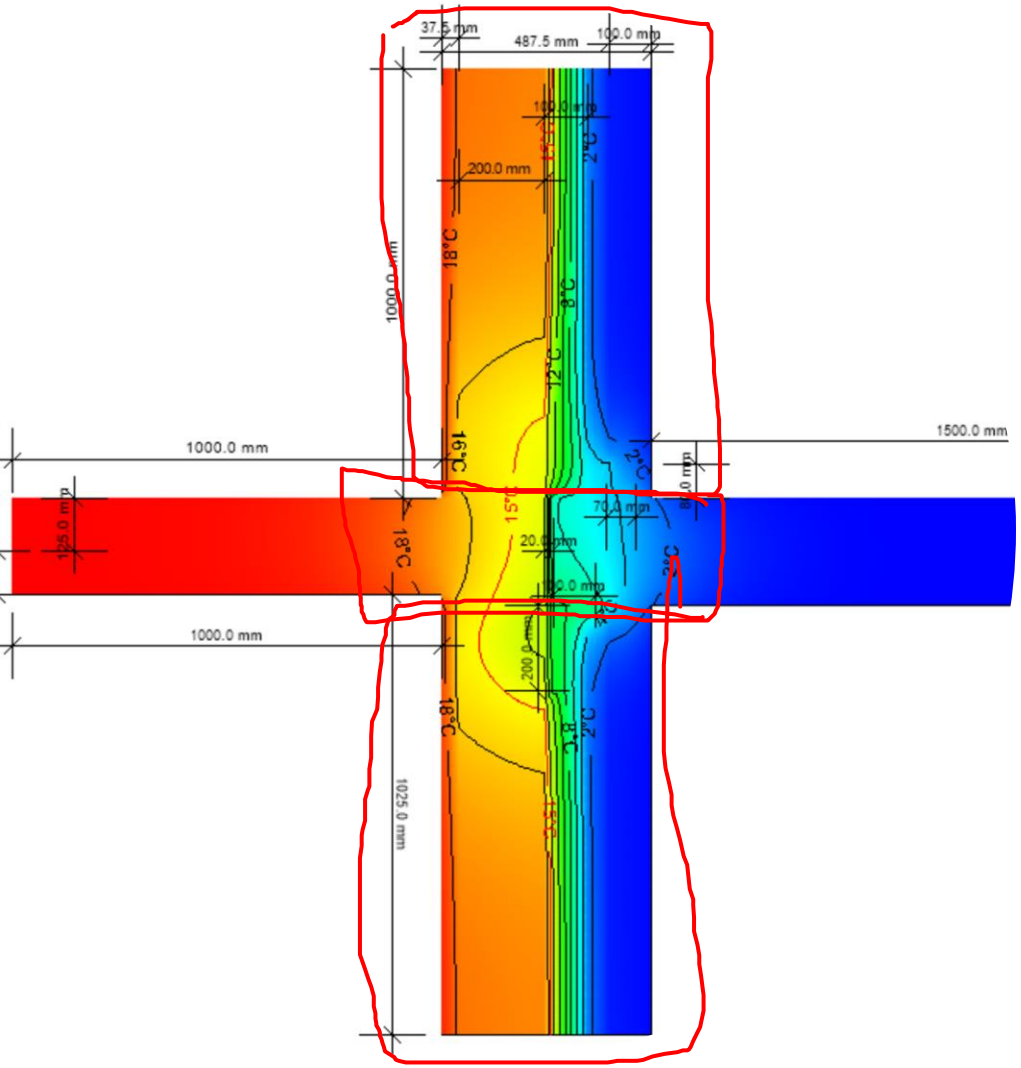

Thermal response

- Relatively straightforward detail:
- Determining chi-value of brackets requires:
- U-value calculation of min. 1 flanking element – possibly numerical calculation also
- Psi-value calculation of intermediate floor detail – possibly 3D detail also
- Calculation of full 3D model including bracketry

Calculation results

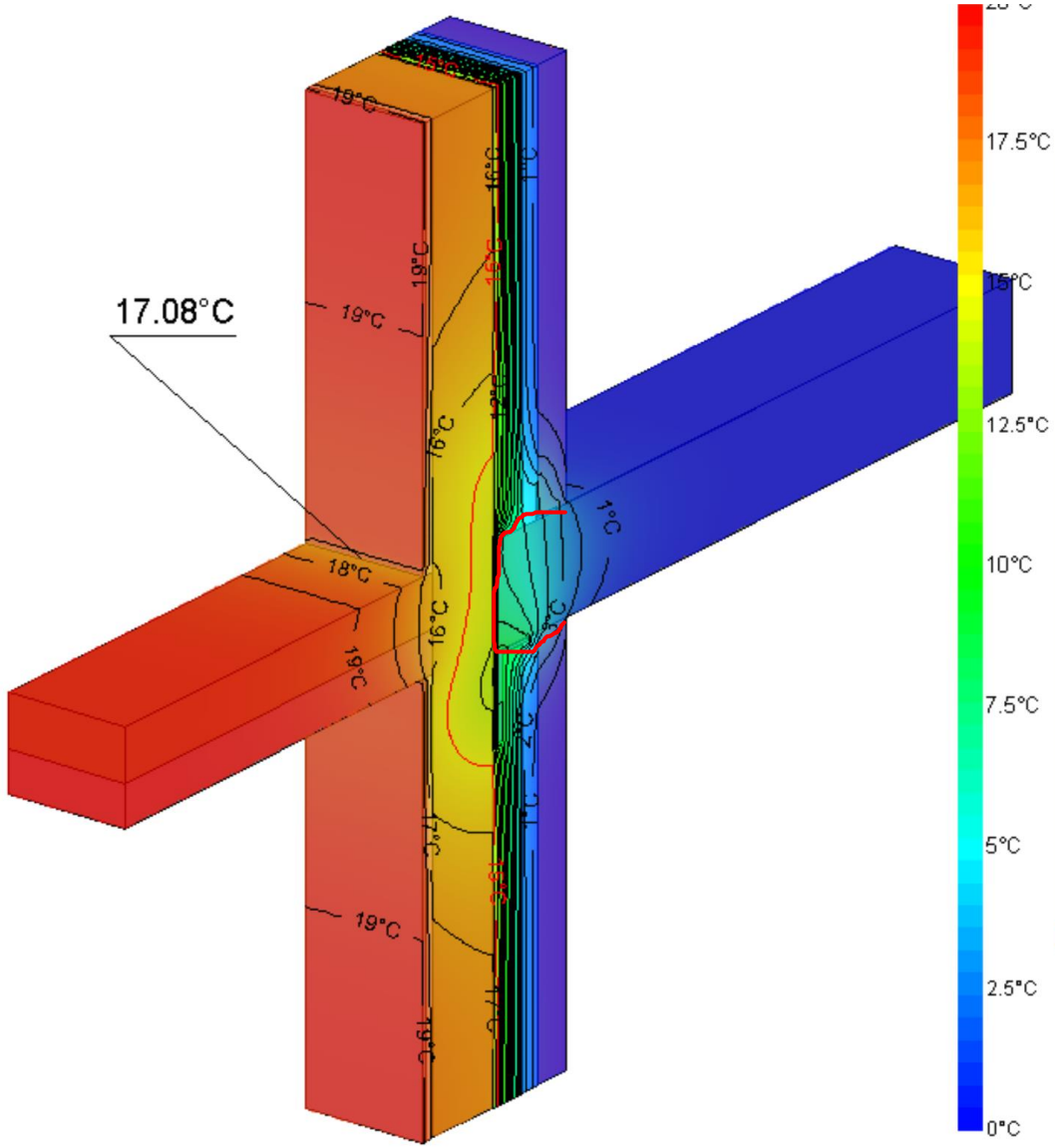

Calculation log

```
        6        Robin     -1.8435      0.4500      0.0000      0.0400
        7        Robin     -0.0001      0.0750      0.0000      0.0400
        8        Robin     -1.9050      0.4500      0.0000      0.0400
        9        Robin     -2.2773      0.3000      0.0000      0.0400
                Total:     -0.0004

Total heat flow (positive)                Q+ =    7.81194 [W]

Total heat flow (from interior outwards)  Q  =    7.81194 [W]
                                                 ====================
Calculation time: (Days:Hours:Minutes:Seconds) 0:0:5:35

Chi-value calculation
=====================

Tabel of unbridged U-values
-----------------------------------
Number description: Area U-value factor
                                [m²]    [W/(m²*K)]
    1   External wall           0.608    0.159    1.000

Table of Psi-values
---------------------
Number description  Length Psi-value factor
                                [m]     [W/(m*K)]
    1   Intermediate floor      0.300    0.329    1.000

Ergebnisse :
------------
 Σ U(i) x A(i) * F(i)                =   0.0966 [ W/K ]
 Σ Ψ(i) x L(i) * F(i)                =   0.0987 [ W/K ]
 L3D                (7.812 / 20.000) =   0.3906 [ W/K ]
 Chi        (0.391 - 0.097 - 0.099) =   0.1953 [ W/K ]
```

next

Key points

U-values based on planar elements/homogenous uninterrupted insulation layers should not be assumed early in the design phase just to achieve a compliant EPC value without some supporting evidence/experience to justify this

Typical adjustments to U-values in accordance with ISO 6946/BR443 will not necessarily apply, e.g. standard wall ties vs. shelf angle brackets.

For non-ACD construction using repeating brackets assume a U-value up to 50% higher than initial calculations suggest.

For non-standard façade systems, U-value calculations provided by insulation providers will rarely account properly for fixings other than standard wall ties.

Fixing requirements (brackets etc.) will be driven by structural requirements as well as fire and sound requirements – only once these have been resolved is the thermal proposal likely to be finalised. All four of these specialists should be coordinated in the design process in order to ensure that all requirements are balanced and met.

Thermal breaks are generally limited in thickness to max. 20-30mm. Significant diminishing returns are observed. Thermal breaks aid significantly in preventing condensation issues, however heat losses will generally still be relatively high at these points.

Key points

DEAP has no entry for point thermal bridges!

Where point thermal bridges occur either at a single point or repeatedly in a planar element (e.g. roof/wall/floor), their effects must be weighted into the U-value of that element

Where point thermal bridges occur along a linear thermal bridge (e.g. shelf angle brackets at a window lintel), their effects must be weighted into the linear psi value for that junction***

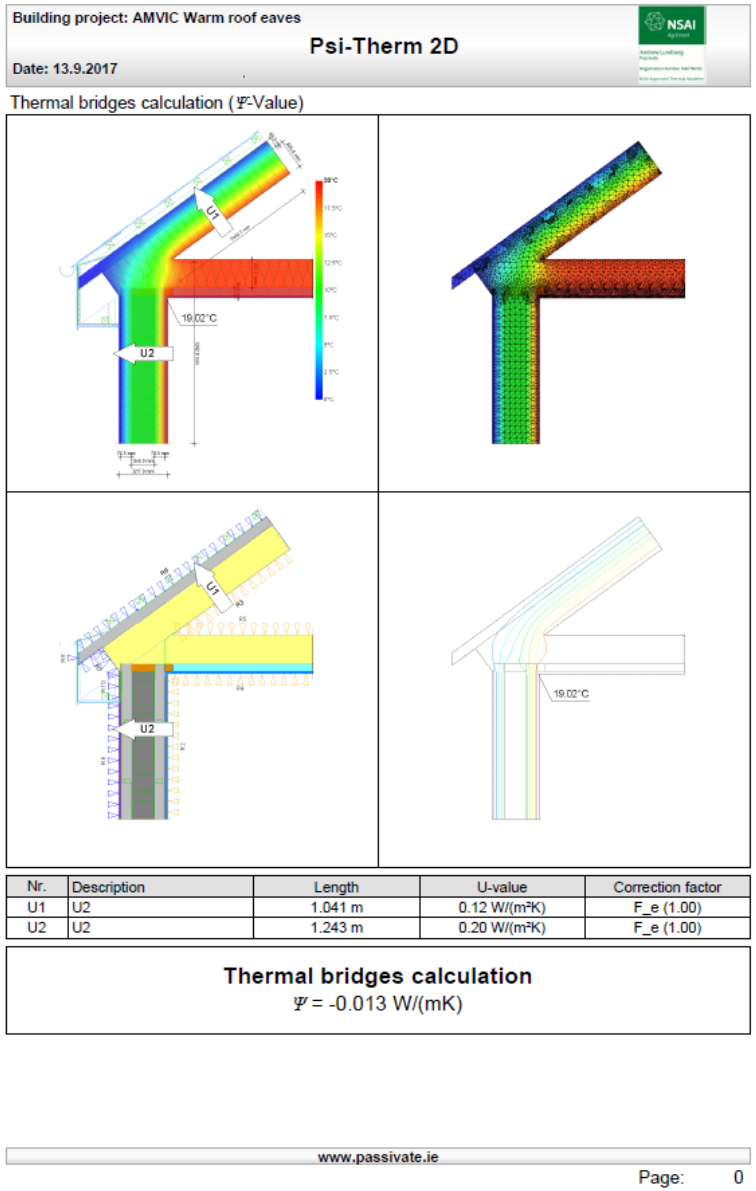

Building project: AMVIC Warm roof eaves

Psi-Therm 2D

Date: 13.9.2017

Thermal bridges calculation (Ψ-Value)

Nr.	Description	Length	U-value	Correction factor
U1	U2	1.041 m	0.12 W/(m²K)	F_e (1.00)
U2	U2	1.243 m	0.20 W/(m²K)	F_e (1.00)

Thermal bridges calculation

Ψ = -0.013 W/(mK)

www.passivate.ie

Page: 0

NSAI-accredited assessors

- Make sure that the assessor is on the thermal modellers register. The NSAI member's name & logo must be on the report.
- The report must list the materials, conductivities, and boundary conditions used.
- The report must reference EN ISO 10211:2008
- The psi-value & fRsi-value must be listed on the report.
- The U-values assigned must be listed on the report, and it must include an image of the detail showing the measured length of each flanking element.
- BER Assessor to be furnished with the report as well as supporting data certificates for all relevant products used (primarily insulation & other thermal products).
- Further detailed information on reporting requirements are available at https://www.nsai.ie/images/uploads/certification-agrement/F-IAB-031_TM_Scheme_Guidance_notes_Rev_C.pdf

Why use a thermal modeller?

- Appointing a thermal modeller to a project at early design stage will allow you to :
  - Quickly determine whether all key junctions are likely to be covered by the ACD's or whether thermal modelling will be required – reduce risk!
  - Provide key input to the detail design process based on experience to ensure energy losses are minimised and no surface condensation risk exists in accordance with TGD Part L 2021 – Dwellings.
  - Value engineer details to ensure cost optimality is achieved – reduce cost!
  - NSAI Thermal modellers register can be viewed at www.nsai.ie

NSAI
Agrément

Andrew Lundberg
Passivate

Registration Number IAB/TM/02

NSAI Approved Thermal Modeller

PASSIVATE.
BUILDING ENERGY CONSULTING

Thank you for your attention!

andrew@passivate.ie

+353-86-8843399